363.1259
B35x

Be Seen.
Be Safe.

ILLINOIS
DEPOSITORY
SEP 23 2004
UNIVERSITY OF
AT URBANA-CHAMPAIGN

YOU and the New SMV Law

Effective September 1, 2004

Rod R. Blagojevich
Governor

Certifies compliance
with (ASAE) S276.5

Be Seen.

OLD vs. NEW

2 times more durable.

10 times brighter.

1000 feet visibility.

The material on the new SMV emblem fades less and can be seen from farther away. Now motorists have more time to react to you and your slow-moving vehicle.

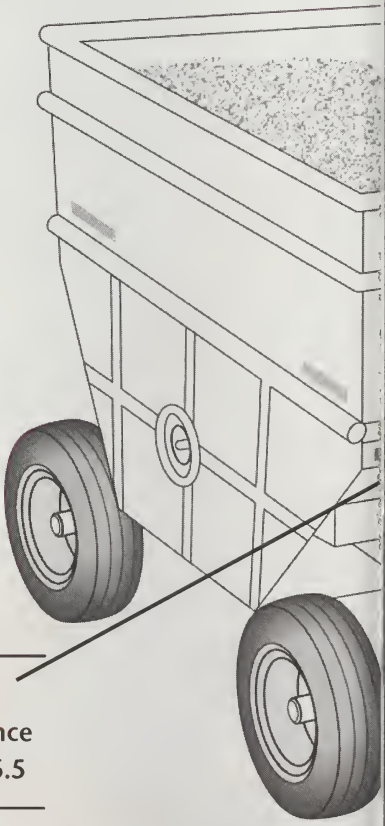

Look for this!
certifies compliance with (ASAE) S276.5

Be Safe.

AVOID CRASHES

These frightening statistics** are the results of collisions between motor vehicles and farm equipment in Illinois

29 deaths.

470 injuries.

1675 collisions.

***Source: 2003 Report of incidents since 1995.*

Get Your New Emblems Today

Be Legal.

You can buy new SMV emblems at most farm equipment dealers, farm supply stores, or County Farm Bureaus®.

For More Information

www.extension.uiuc.edu
www.ilfb.org

Contact your County Farm Bureau to view the ***"Be Safe. Be Seen"*** video.

Want to be even safer?

Put additional markings (ASAE S279.12) on your tractors and equipment.

Are you legal?

Look for this message.

Certifies compliance
with (ASAE) S276.5

NEW Illinois Slow-Moving Vehicle Law

Starting September 1, 2004, you are required by law to display the new, safer SMV emblem on the tractors and farm equipment you take on public roads. Farmers who violate this law may be fined up to $75 per incident.*

**Illinois Vehicle Code section 625 ILCS 5/12-709*

FSX3853WM0204

ILLINOIS FARM BUREAU®

ILLINOIS STATE POLICE
INTEGRITY · SERVICE · PRIDE

FARM®

WE LOOK FORWARD TO SEEING YOU!

FEWER ACCIDENTS with REFLECTIVE MATERIAL

Improve Roadway Safety By Reducing The Number Of Collisions With Farm Equipment

Printed by the State of Illinois
ISP Central Printing Section
ISP 5-567 (5/04) 100M
www.illinois.gov www.isp.state.il.us